# MBON All Hands Meeting
# May 26, 2017
# Washington D.C.

IOOS | EYES ON THE OCEAN™

# MBON Data Pipeline - What does the system look like as a whole?

May 26, 2017

Jennifer Bosch (U.S. IOOS)

Abby Benson (USGS-OBIS)

IOOS | EYES ON THE OCEAN™

# MBON Data Pipeline

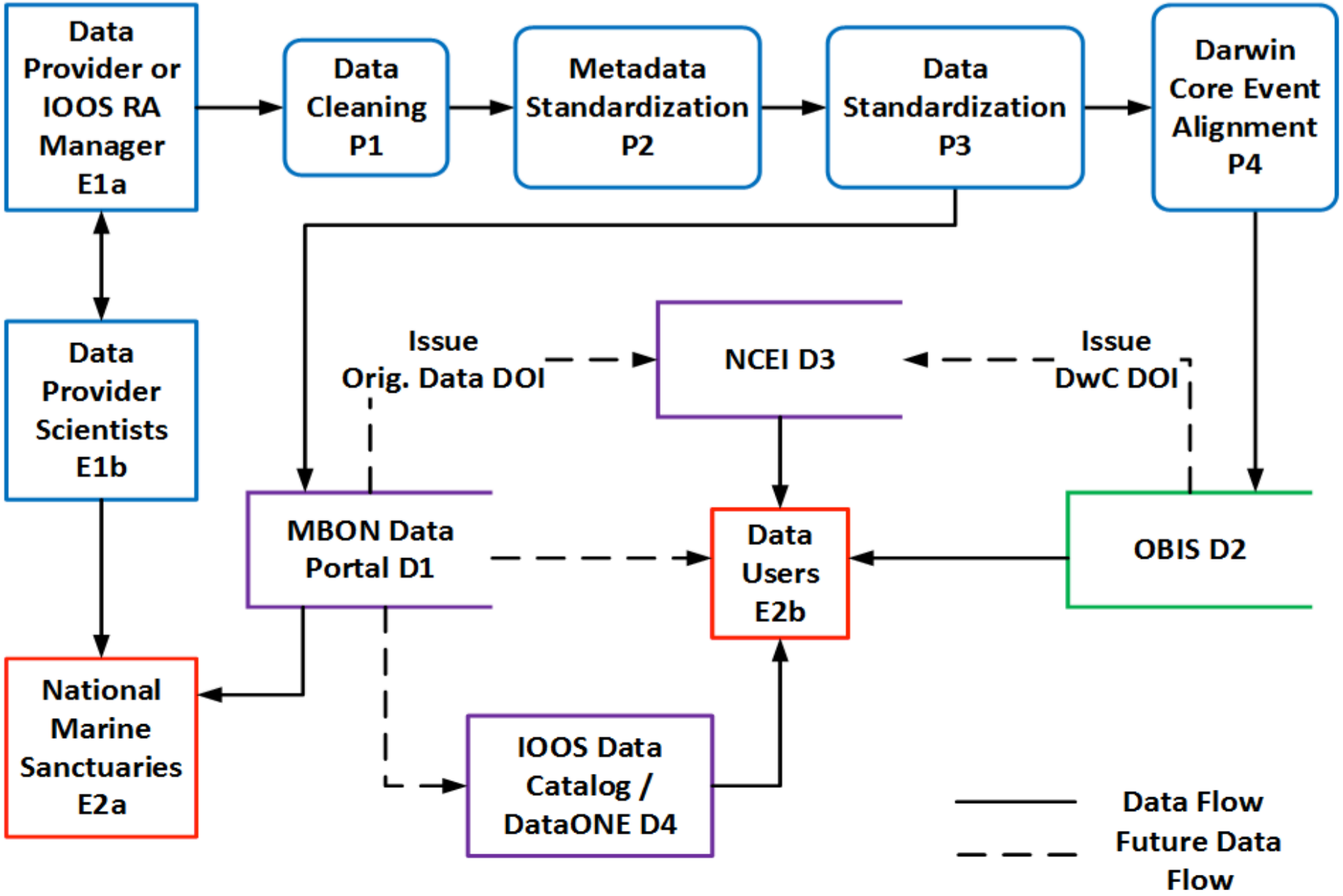

# MBON Data Pipeline

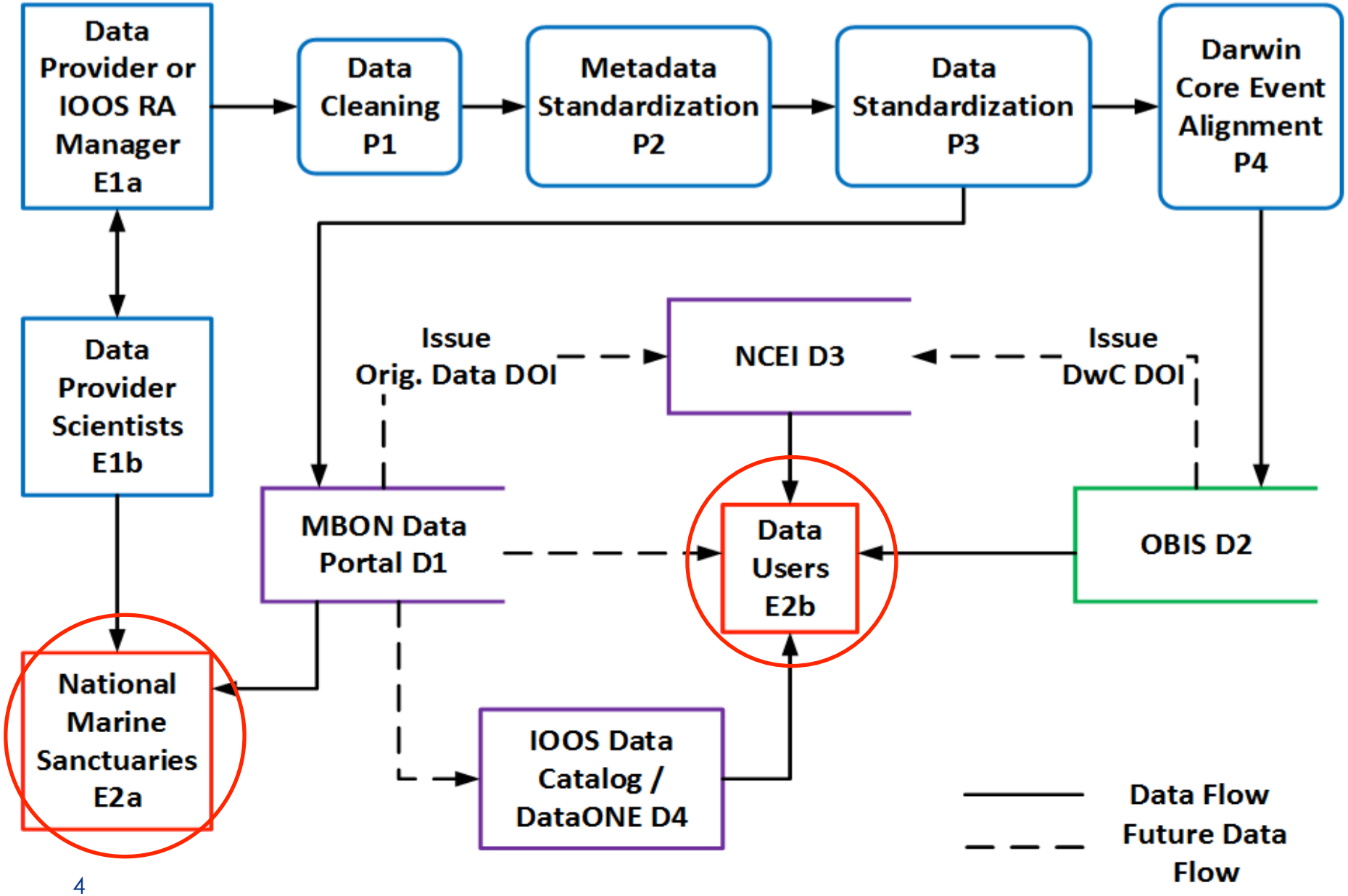

# Data Users want consistency & standards

*Users look for consistent data at one location*

**Formats** –
- text, csv, or netCDF

**Access** –
- API (ERDDAP, THREDDS) using scripted, machine to machine methods (R, Python, Matlab)

**Metadata** -
- For all data - ISO19115 or EML
- For physical data - CF v1.6 and ACDD v1.3.

**Naming conventions** –
- For biological taxonomic ID - WoRMS
- For physical/chemical data - follow the appropriate IOOS QARTOD manual or community vocabulary
- For all data
  - Datetimes are ISO-8601
  - Locations are in decimal degrees
- For concurrent physical and biological data - Darwin Event Core

# An Integrated resource different than a Catalog

**IOOS Catalog or DataOne**

- Metadata search and discovery tools

**MBON Data Portal**

- Both a metadata discovery tool and a place for data access of discrete datasets

**OBIS**

- Darwin Event Core aligned
- Fully integrated across multiple datasets

# MBON Data Pipeline

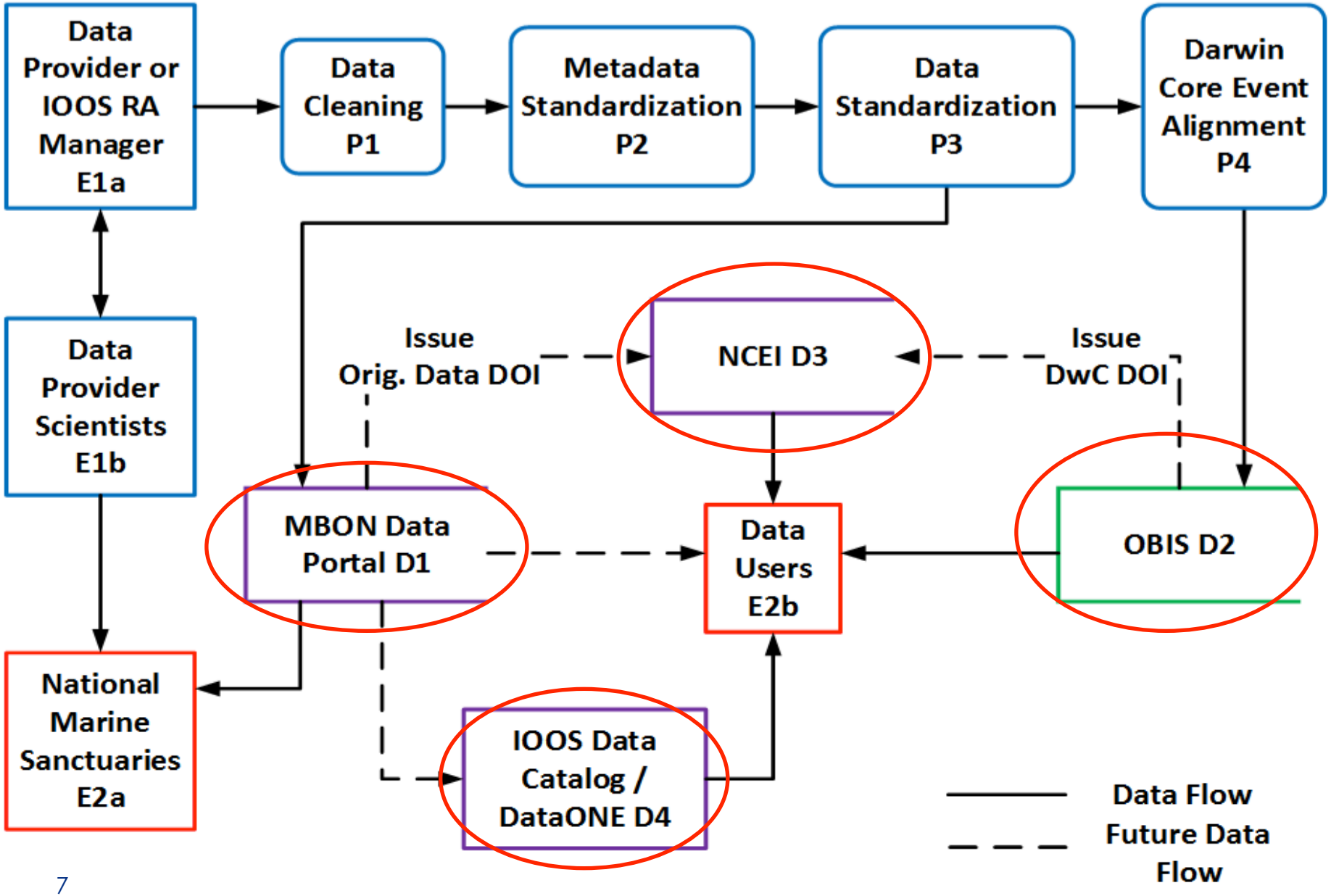

# Users find data in 4 places

**MBON Data Portal**

- Run by AXIOM data science
- Home of the canonical data set

**IOOS Catalog / DataONE**

- Metadata discoverable to broader IOOS audience

**OBIS**

- Darwin Event Core aligned
- Fully integrated across multiple datasets

**NCEI Archive**

- Home of the canonical data set AND the OBIS data set
- Long-term preservation DOI issued for all data sets

# MBON Data Pipeline

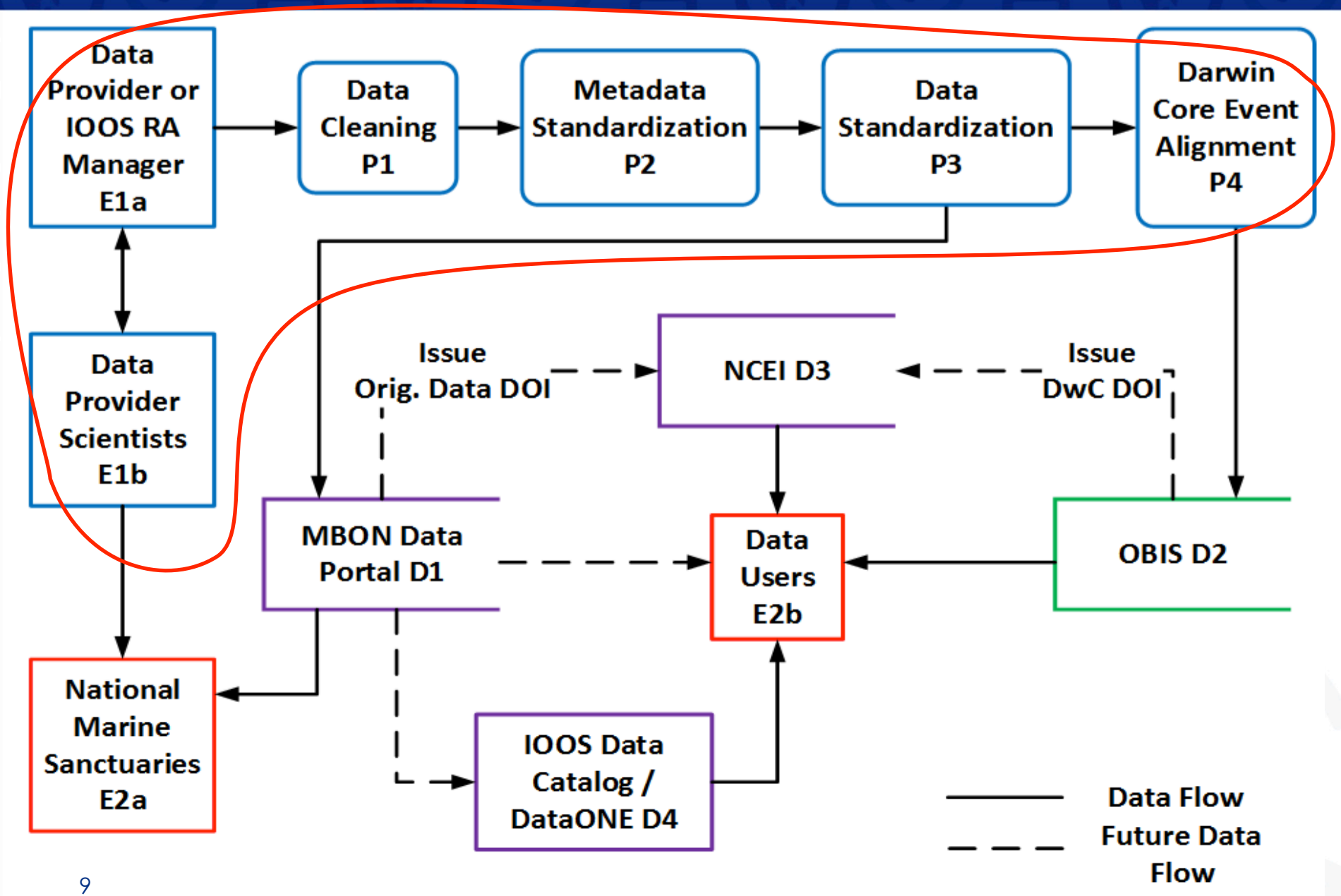

# Data Providers carefully curate data

**Entities**

E1a - Data Provider or IOOS Regional Association data Manager
E1b - Scientists - those that collect the data & conduct research

**Processes**

P1 - Cleaning data from it's original raw format - QA/QC

P2 - Metadata Standardization - authoring of metadata

- For all data - ISO19115 or EML
- For physical data - Climate and Forecast (CF) Conventions v1.6 and ACDD v1.3.

P3 - Data Standardization

- For biological taxonomic ID - WoRMS
- For physical/chemical data - follow the appropriate IOOS QARTOD manual or community vocabulary
- Datetimes are ISO-8601, Locations are in decimal degrees

P4 - Darwin Event Core -Alignment of concurrent physical/chemical and biological data

# MBON Data Pipeline

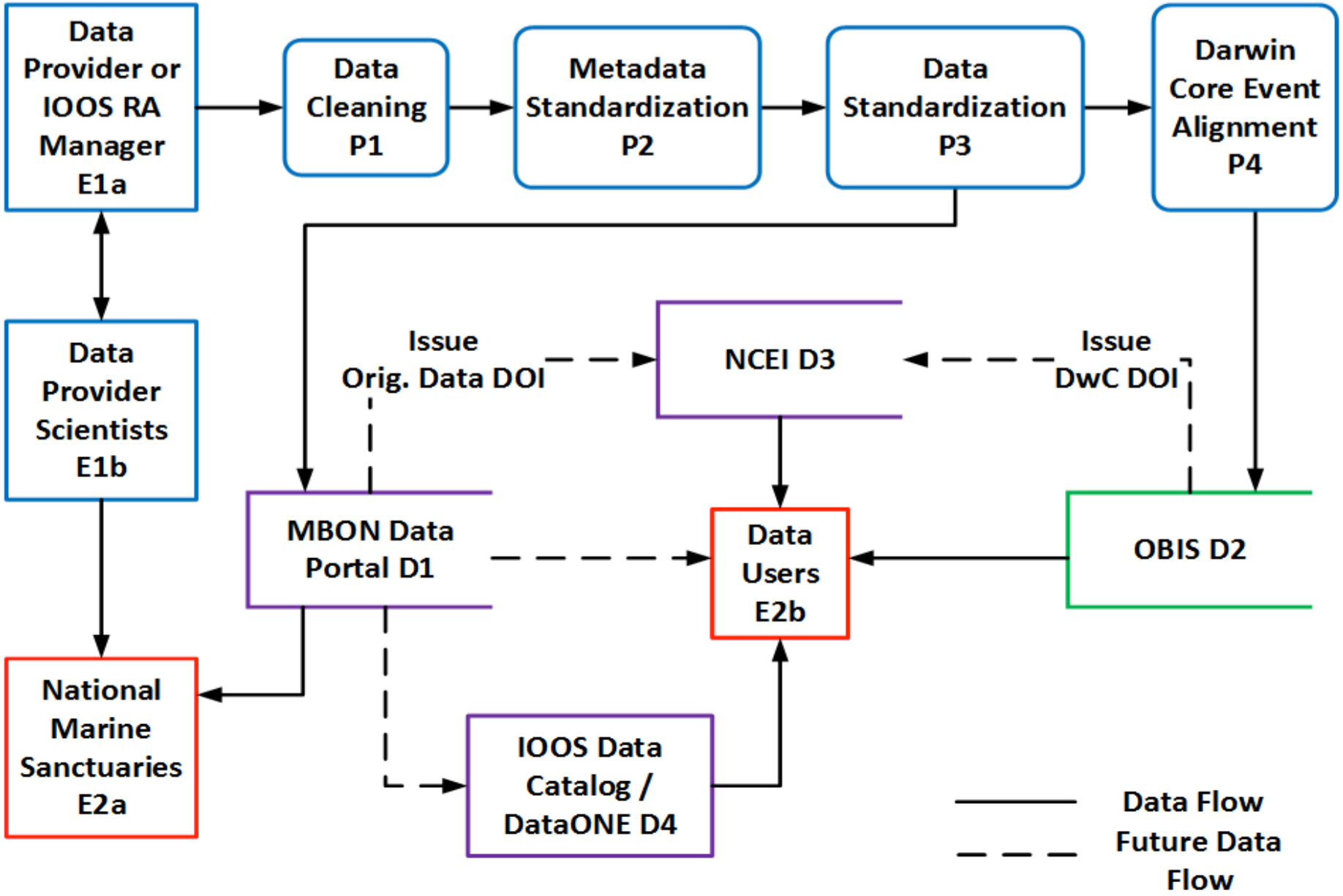

# Questions?

```r
devtools::install_github("iobis/robis")
require(robis)



black_drum_test<- occurrence("Pogonias cromis")
```



IOOS | EYES ON THE OCEAN

~/OBIS/iOBIS Widgets - RStudio

File Edit Code View Plots Session Build Debug Profile Tools Help

Go to file/function | Addins | iOBIS Widgets

PlayingWithOBISAPI.R* | black_drum_test

Filter

| | id | decimalLongitude | decimalLatitude | institutionCode | collectionCode | catalogNumber | individualCount | datasetName | phylum | order | family |
|---|---|---|---|---|---|---|---|---|---|---|---|
| 1086 | 423971490 | -97.42611 | 27.26306 | TPWD | Upper Laguna Madre Gill Net | NA | NA | TPWD HARC Texas Coastal Fisheries Upper Laguna M... | Chordata | Perciformes | Sciaenidae |
| 1087 | 423971491 | -97.43000 | 27.26306 | TPWD | Upper Laguna Madre Gill Net | NA | NA | TPWD HARC Texas Coastal Fisheries Upper Laguna M... | Chordata | Perciformes | Sciaenidae |
| 1088 | 423971492 | -97.43028 | 27.26306 | TPWD | Upper Laguna Madre Gill Net | NA | NA | TPWD HARC Texas Coastal Fisheries Upper Laguna M... | Chordata | Perciformes | Sciaenidae |
| 1089 | 423971493 | -97.63611 | 27.24583 | TPWD | Upper Laguna Madre Gill Net | NA | NA | TPWD HARC Texas Coastal Fisheries Upper Laguna M... | Chordata | Perciformes | Sciaenidae |
| 1090 | 423971494 | -97.63750 | 27.24861 | TPWD | Upper Laguna Madre Gill Net | NA | NA | TPWD HARC Texas Coastal Fisheries Upper Laguna M... | Chordata | Perciformes | Sciaenidae |
| 1091 | 423971495 | -97.63889 | 27.24861 | TPWD | Upper Laguna Madre Gill Net | NA | NA | TPWD HARC Texas Coastal Fisheries Upper Laguna M... | Chordata | Perciformes | Sciaenidae |
| 1092 | 423971496 | -97.63750 | 27.24889 | TPWD | Upper Laguna Madre Gill Net | NA | NA | TPWD HARC Texas Coastal Fisheries Upper Laguna M... | Chordata | Perciformes | Sciaenidae |
| 1093 | 423971497 | -97.63750 | 27.24889 | TPWD | Upper Laguna Madre Gill Net | NA | NA | TPWD HARC Texas Coastal Fisheries Upper Laguna M... | Chordata | Perciformes | Sciaenidae |
| 1094 | 423971498 | -97.63750 | 27.24917 | TPWD | Upper Laguna Madre Gill Net | NA | NA | TPWD HARC Texas Coastal Fisheries Upper Laguna M... | Chordata | Perciformes | Sciaenidae |
| 1095 | 423971499 | -97.63778 | 27.24944 | TPWD | Upper Laguna Madre Gill Net | NA | NA | TPWD HARC Texas Coastal Fisheries Upper Laguna M... | Chordata | Perciformes | Sciaenidae |
| 1096 | 423971500 | -97.62444 | 27.24139 | TPWD | Upper Laguna Madre Gill Net | NA | NA | TPWD HARC Texas Coastal Fisheries Upper Laguna M... | Chordata | Perciformes | Sciaenidae |
| 1097 | 423971501 | -97.61806 | 27.24167 | TPWD | Upper Laguna Madre Gill Net | NA | NA | TPWD HARC Texas Coastal Fisheries Upper Laguna M... | Chordata | Perciformes | Sciaenidae |
| 1098 | 423971502 | -97.61806 | 27.24167 | TPWD | Upper Laguna Madre Gill Net | NA | NA | TPWD HARC Texas Coastal Fisheries Upper Laguna M... | Chordata | Perciformes | Sciaenidae |
| 1099 | 423971503 | -97.61889 | 27.24167 | TPWD | Upper Laguna Madre Gill Net | NA | NA | TPWD HARC Texas Coastal Fisheries Upper Laguna M... | Chordata | Perciformes | Sciaenidae |
| 1100 | 423971504 | -97.61917 | 27.24167 | TPWD | Upper Laguna Madre Gill Net | NA | NA | TPWD HARC Texas Coastal Fisheries Upper Laguna M... | Chordata | Perciformes | Sciaenidae |
| 1101 | 423971505 | -97.61944 | 27.24167 | TPWD | Upper Laguna Madre Gill Net | NA | NA | TPWD HARC Texas Coastal Fisheries Upper Laguna M... | Chordata | Perciformes | Sciaenidae |
| 1102 | 423971506 | -97.62361 | 27.24167 | TPWD | Upper Laguna Madre Gill Net | NA | NA | TPWD HARC Texas Coastal Fisheries Upper Laguna M... | Chordata | Perciformes | Sciaenidae |
| 1103 | 423971507 | -97.62500 | 27.24167 | TPWD | Upper Laguna Madre Gill Net | NA | NA | TPWD HARC Texas Coastal Fisheries Upper Laguna M... | Chordata | Perciformes | Sciaenidae |

Showing 1,085 to 1,104 of 20,699 entries



IOOS | EYES ON THE OCEAN

iobis.org/explore/#/taxon/494980

OBIS OCEAN BIOGEOGRAPHIC INFORMATION SYSTEM

HOME ABOUT MAPPER DATA MANUAL GOVERNANCE SPONSOR LIBRARY CONTACT

# Pogonias cromis (Linnaeus, 1766)

## Overview

| | |
|---|---|
| Rank | Species |
| OBIS ID | 494980 |
| Valid OBIS ID | 494980 |
| AphiaID | 159333 |
| Records | 20,699 |
| Datasets | 48 |
| Red List status | LC |
| Global Invasive Species Database | - |
| Harmful Micro Algae | - |

## Common names

| Name | Language |
|---|---|
| Ombervis | Dutch |
| black drum | English |
| blackdrum | English |
| Banded drum | English |
| Oyster drum | English |
| Gray drum | English |
| Oyster cracker | English |
| sea drum | English |
| Drumfish | English |
| Drummer | English |

iobis.org/explore/#/taxon/494980

OBIS OCEAN BIOGEOGRAPHIC INFORMATION SYSTEM

HOME ABOUT MAPPER DATA MANUAL GOVERNANCE SPONSOR LIBRARY CONTACT

## Datasets

| Name | Node | Provider |
|---|---|---|
| Canadian Museum of Nature - Fish Collection | OBIS Canada | OBIS Canada |
| Bay of Fundy Species List | OBIS Canada | OBIS Canada |
| NOAA HML Tidal Creek Database | Not associated with an OBIS Node | |
| A Biological Survey of the Waters of Woods Hole and Vacinity | OBIS-USA | OBIS-USA |
| Colección Ictiológica Del Instituto Nacional de Investigación y Desarrollo Pesquero (INIDEP), Arg... | OBIS Argentina | Universidad Nacional de Mar del Plata |
| Fishes in the Argentine Sea from 1967 to the present time | OBIS Argentina | Centro Nacional Patagónico - CONICET |
| Fishbase occurrences hosted by GBIF-Sweden | FishBase OBIS | FishBase |
| Northeast Fisheries Science Center Bottom Trawl Survey Data | OBIS-USA | OBIS-USA |
| Southeast Area Monitoring and Assessment Program (SEAMAP) South Atlantic | OBIS-USA | OBIS-USA |
| Biodiversity of the Gulf of Mexico Database (BioGoMx) | OBIS-USA | OBIS-USA |

Previous 1 2 3 4 5 Next

Download

Secure | https://search.dataone.org/#data

DataONE

About News Participate Resources Education Data

DATAONE SEARCH: Search Summary Jump to: DOI or ID Go Sign in or Sign up

✖ Clear all filters

Search

Search phrase

My Search

Pogonias cromis ✖

Filter by:

- Data attribute
- Data files
- Member Node
- Creator
- Year

Datasets 1 to 1 of 1

Sort by Most recent

USGS Jill A. Jenkins, Heather M. Olivier, Rassa O. Draugelis-Dale, and Michael D. Kaller. 2011. **Trace Element Ranges Detected in Fish from the Prediversion and Postdiversion Studies at Caernarvon (1990-1994) and Davis Pond (2001, 2007-2009) in Louisiana.** USGS Science Data Catalog. fe050d3a-026b-4726-986b-299ba3bfac3b.

Hide Map »

IOOS | EYES ON THE OCEAN

Secure | https://search.dataone.org/#data

DataONE

About News Participate Resources Education Data

DATAONE SEARCH: Search Summary Jump to: DOI or ID Go Sign in or Sign up

✖ Clear all filters

Search

Search phrase

My Search

black drum ✖

Filter by:

- Data attribute
- Data files
- Member Node
- Creator
- Year

GULF OF MEXICO RESEARCH INITIATIVE GRIIDC R. Eugene Turner. 2016. **Louisiana commercial Fish Landings and Value by species month year basin 2000 to April 2014.** Gulf of Mexico Research Initiative. R1-x139-143-0007-003.

47

GULF OF MEXICO RESEARCH INITIATIVE GRIIDC 2015. **Predator-prey diet linkages with error range for the Gulf of Mexico fitted using maximum likelihood method..** Gulf of Mexico Research Initiative. R1-x135-120-0007-002.

45

USGS Jill A. Jenkins, Heather M. Olivier, Rassa O. Draugelis-Dale, and Michael D. Kaller. 2011. **Trace Element Ranges Detected in Fish from the Prediversion and Postdiversion Studies at Caernarvon (1990-1994) and Davis Pond (2001, 2007-2009) in Louisiana.** USGS Science Data Catalog. fe050d3a-026b-4726-986b-299ba3bfac3b.

Hide Map »

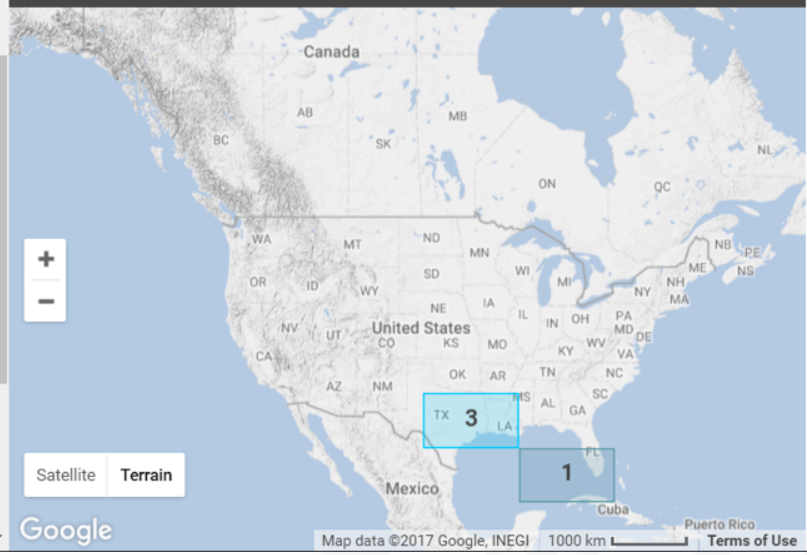




IOOS | EYES ON THE OCEAN

mbon.ioos.us/#module-search?page=1&tagId=&q=Pogonias%2520cromis&tags=&types=module%2Csensor_station%2Cproject

IOOS Marine Biodiversity Observation Network

Pogonias cromis

Catalog Portal Settings BETA

feedback

**Result types**

- [x] Map layers
- [x] Projects
- [x] Sensor stations

**Advanced search options**

| | |
|---|---|
| AMBON Projects | 13 |
| Alaska | 18 |
| Bathymetry | 1 |
| Benthic Communities | 7 |
| Biodiversity | 9 |
| Biodiversity Indices | 5 |
| Birds | 7 |
| California | 15 |
| Environmental | 4 |
| Fish | 13 |
| Florida | 48 |
| Ground Temperature | 1 |
| Habitat and Sensitivity | 11 |
| Mammals | 7 |
| Management | 4 |

No results



IOOS | EYES ON THE OCEAN

mbon.ioos.us/#module-search?page=1&tagId=&q=black%2520drum&tags=&types=module%2Csensor_station%2Cproject

IOOS Marine Biodiversity Observation Network

black drum

Catalog Portal Settings BETA

**Result types**

Map layers Projects Sensor stations

**Advanced search options**

| | |
|---|---|
| AMBON Projects | 13 |
| Alaska | 18 |
| Bathymetry | 1 |
| Benthic Communities | 7 |
| Biodiversity | 9 |
| Biodiversity Indices | 5 |
| Birds | 7 |
| California | 15 |
| Environmental | 4 |
| Fish | 13 |
| Florida | 48 |
| Ground Temperature | 1 |
| Habitat and Sensitivity | 11 |
| Mammals | 7 |
| Management | 4 |

feedback

1-10 of 31 results

## Arctic Marine Synthesis

In early 2010, Audubon Alaska, in cooperation with Oceana, completed the Arctic Marine Synthesis: Atlas of the Chukchi and Beaufort Seas. The project area includes the southern Beaufort, southern Chukchi, and northern Bering seas. In total, this project obtained and compiled spatial data from over 100 sources, plus literature and reports from another 400 sources, including peer-reviewed journals, government agencies, universities, NGOs, and ot...

Portal +

Black Guillemot Distribution

Bearded Seal Distribution

Beluga Whale Distribution

Beluga Whale Migration

Bowhead Whale Distribution

## USFWS Seabird Studies

Forty-six species totaling approximately eighty million individual seabirds breed in Alaska and the Russian Far East. During the summer, seabirds gather in groups to breed and nest. A group of nesting birds is referred to as a colony. These colonies are distributed on all parts of the Alaskan and Russian Far East coasts. Seabird colonies have been censused for many years and the U.S. Fish and Wildlife Service has compiled much of the census da...

mbon.ioos.us/#module-metadata/8c6e3c7c-4294-11e2-bc24-00219bfe5678/...